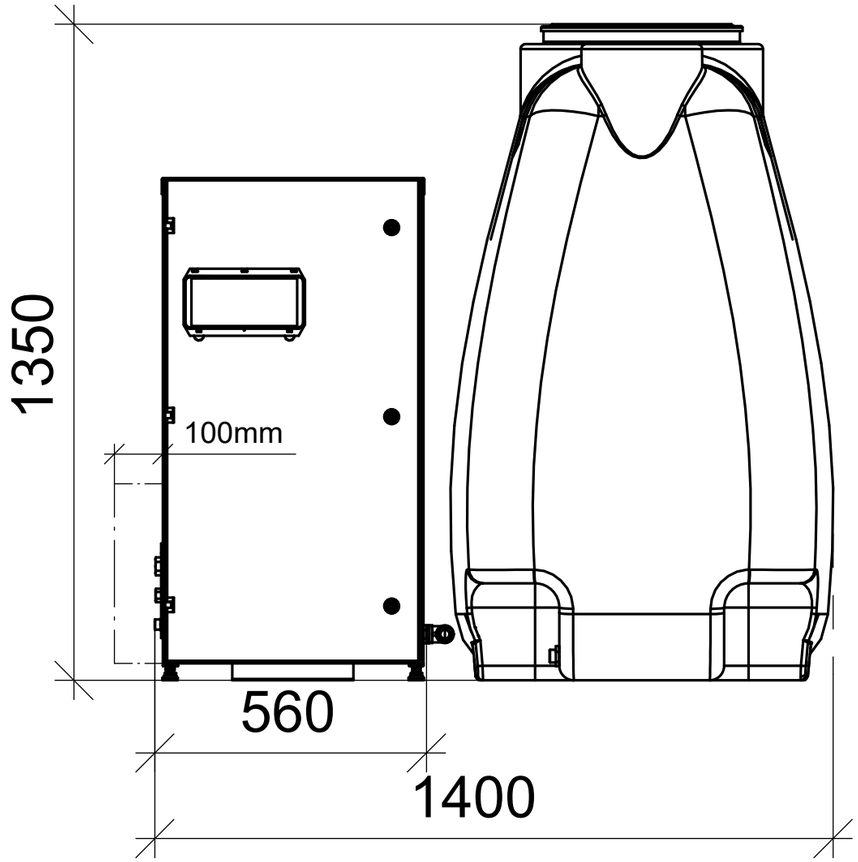
1350
100mm
560
1400

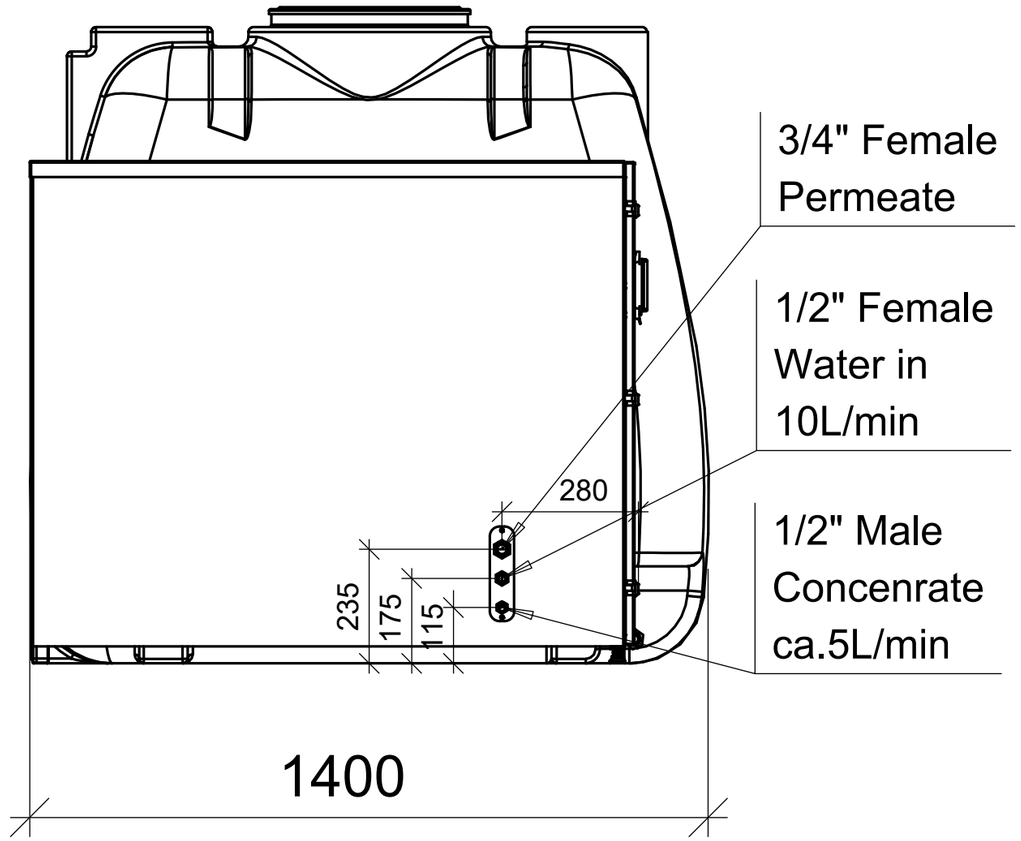
3/4" Female
Permeate
1/2" Female
Water in
10L/min
1/2" Male
Concenrate
ca.5L/min
280
235
175
115
1400

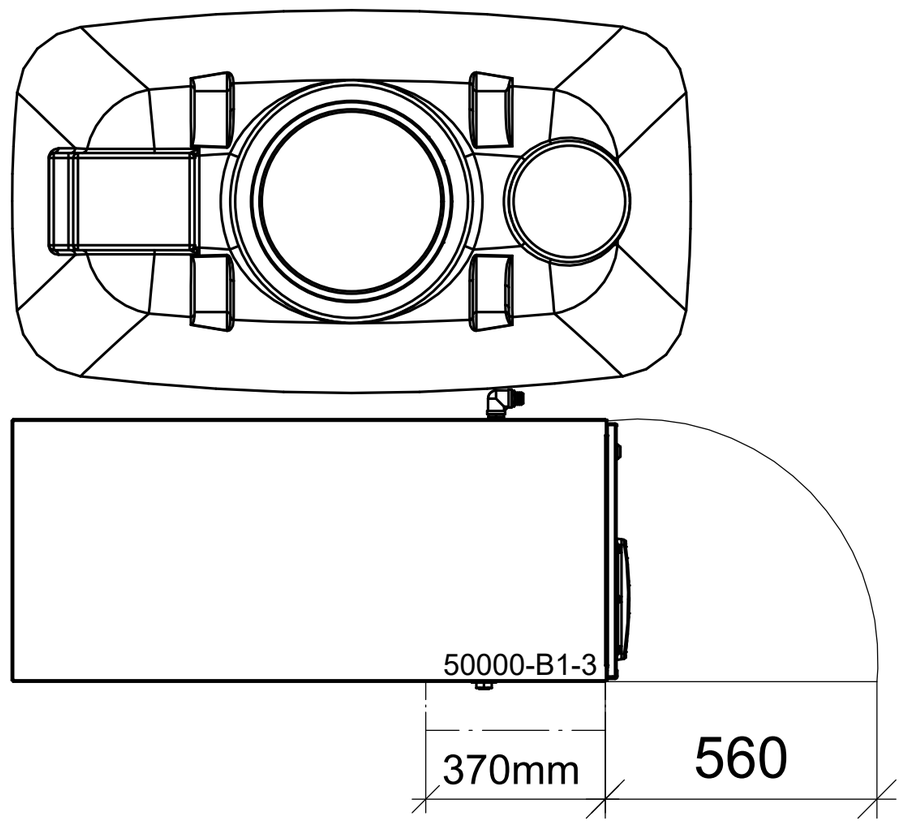
50000-B1-3
370mm
560