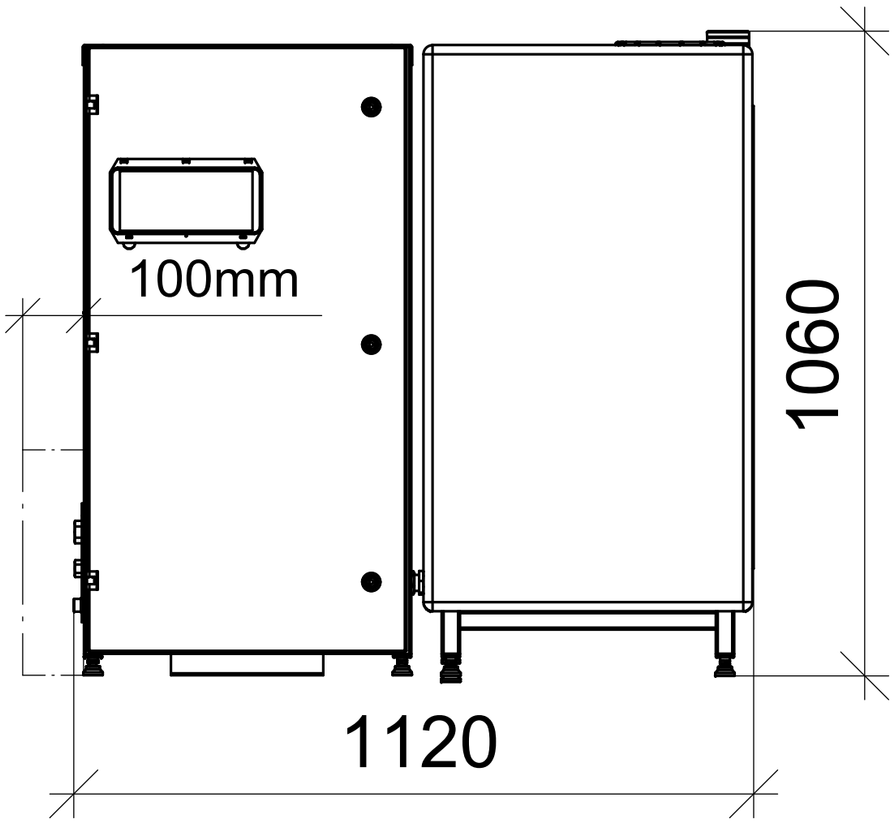
100mm
1060
1120

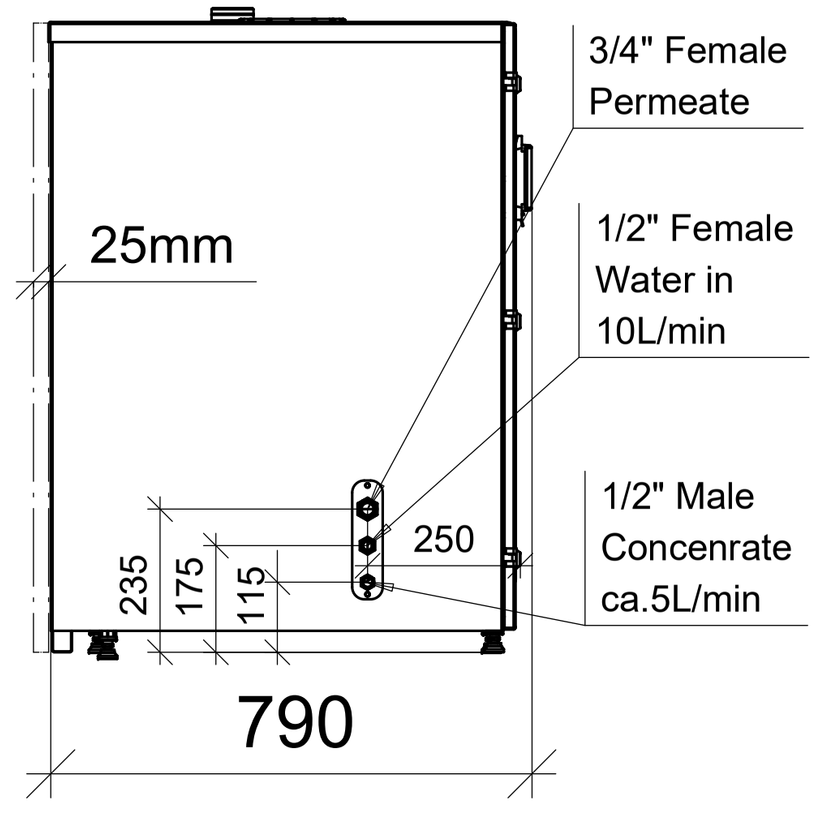
3/4" Female
Permeate
1/2" Female
Water in
10L/min
1/2" Male
Concenrate
ca.5L/min
25mm
250
235
175
115
790

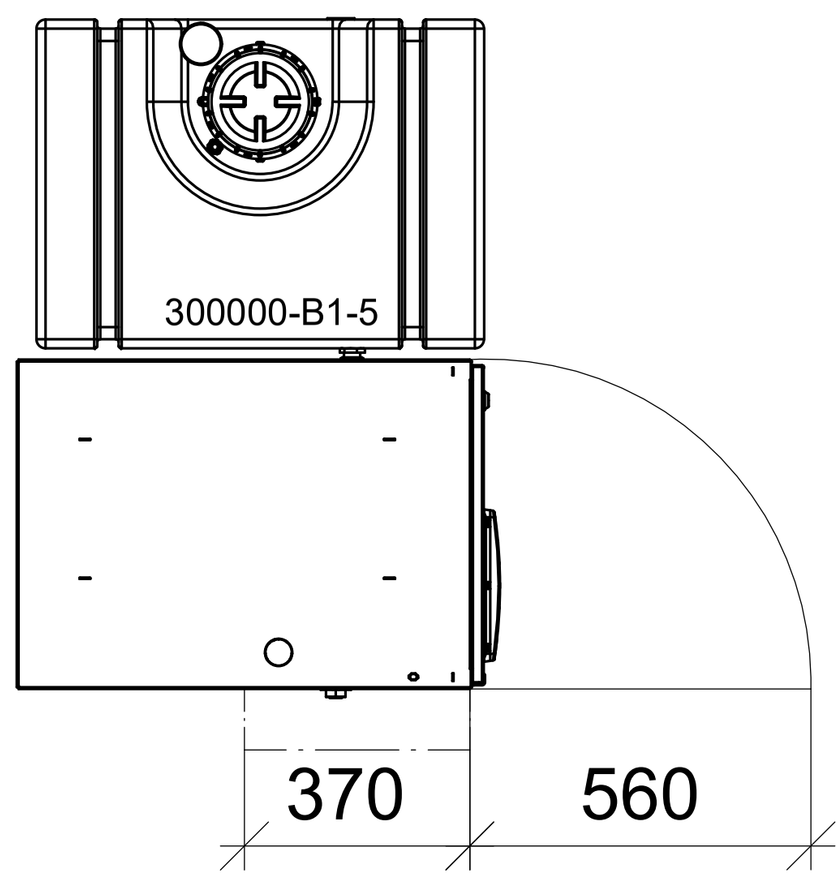
300000-B1-5
370
560